5. Activate the switch just like with normal operation.
6. Turn the machine off after a small quantity of the solution has dripped into the acrylic jug.
7. Wait 5 to 6 minutes so that the rest of the solution can soak into the deposits, then turn the machine back on.
8. Once the solution has run through completely , turn the switch off and dispose of the solution.
9. As a small quantity of the solution remains in the machine, you have to repeat the brewing process a couple of times until the hot water that flows out of the machine with no trace of the descaler
10. Now the machine is ready to make coffee again.

NOTE: Instead of a descaler , you can also use 300 ml of fresh lemon juice for the solution.

STORING THE COFFEE MAKER

IMPORTANT: Before storage, be sure that the coffee maker is switched off , disconnected from the mains, and completely cool (after use). Also ensure that the machine is completely emptied of water (see notes on the drain screw).

Store in a dry and dust-free environment.
Do not expose to direct sunlight.
Do not expose to extreme temperatures.
Store out of the reach of children.

IMPORTANT NOTES

- **The RESET button (H):**
  In the event of the unit overheating, it will automatically shut off. You will need to press the RESET button found on the back panel of the coffee maker to use the appliance again.

- **The DRAIN SCREW (I):**
  After use, some water always remains in the pipes and other parts of the machine. The coffee maker must always be emptied before moving or storing it. Drain out the excess water by loosening the screw (I) at the back of the machine (bottom). Ensure that you have a sufficient container ready to catch the water when it flows out. You may need to tilt the unit slightly to remove the last few drips of water

SYMBOL DEFINITION

Indicates the On/Off switch that starts the coffee brewing process. This button also switches on the base hotplate (F).

Indicates the On/Off switch that switches on the top hotplate (G).

COFFEE MAKER

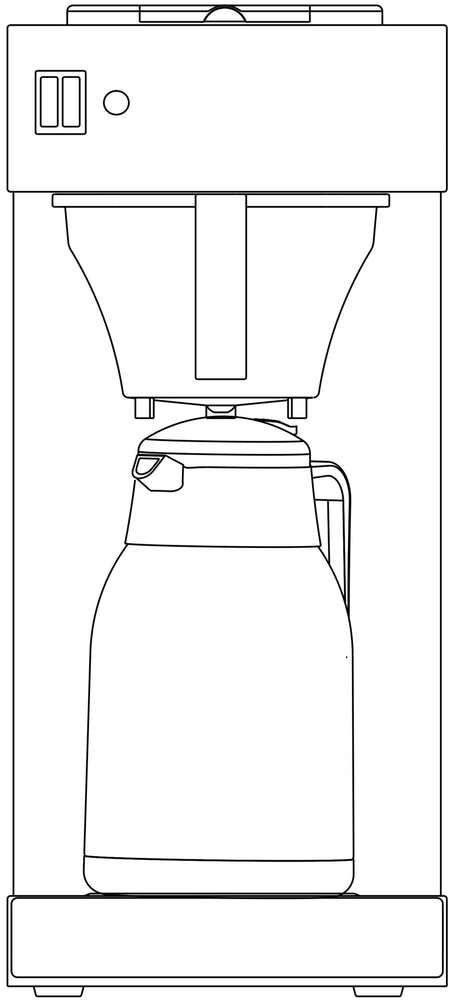

USER MANUAL

PARTS IDENTIFICATON

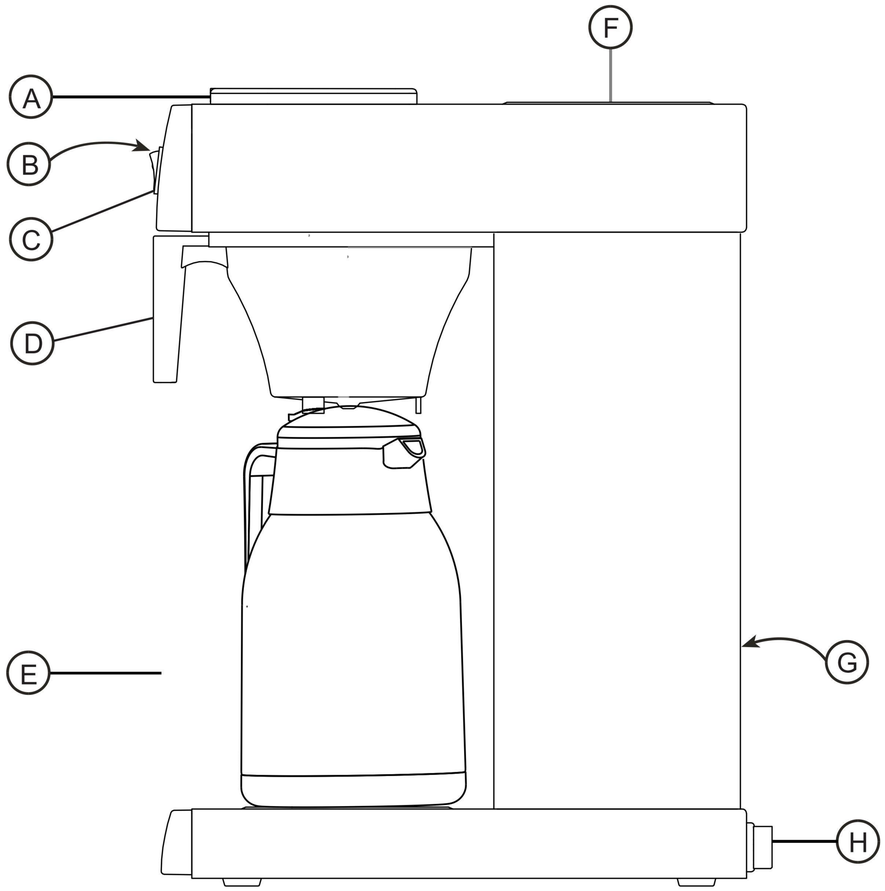

(A) Hinged lid
(B) Status indicator light (next to On/Off switches)
(C) On/Off switches (shown in the OFF position)
(D) Filter basket (slides out by pulling on the handle)
(E) Coffee Jug
(F) Top Hotplate (observe extra caution if using this hotplate)
(G) RESET button (at back)
(H) Drain screw

Pictures for illustration purposes only
Actual product may differ slightly

SPECIFICATIONS

Model No.:	FKMV20E
Voltage:	230V ~ 50Hz
Power Consumption:	2000W

PLEASE READ ALL THESE INSTRUCTIONS BEFORE USE AND RETAIN FOR FUTURE REFERENCE!

IMPORTANT SAFETY NOTES!

- Before connecting the coffee maker to the mains supply check that the voltage matches the voltage on the rating plate.
- Place the coffee maker on a flat surface, far from the edge of the work top to avoid it being knocked off .
- DO NOT allow the power cable to hang dangerously , or allow it to come into contact with hot surfaces.
- Only use the jug that is designed to be used with this coffee maker . DO NOT place the jug on a cooker hot plate or in a microwave. DO NOT place a hot jug on a wet or cold surface. DO NOT use the jug if it is cracked or if the handle is loose.
- Keep the appliance away from children.
- DO NOT touch hot surfaces! During use, parts of this appliance become very hot. Use the handles provided!
- NEVER immerse the appliance or its power plug/cable in water or any other liquid. Keep the unit away from sources of liquid, moisture or places where it could get splashed.
- Always switch off and disconnect from the mains when not in use, and before cleaning. Allow it to cool before placing/removing pieces and before cleaning.
- Set the switches (C) to the off position before unplugging the appliance.
- DO NOT use the appliance if the cord or plug is damaged, or if the unit has been dropped or damaged in any way . If in any doubt, have it checked over by a qualified person before use.
- NEVER attempt to dismantle this appliance. There are no parts inside that can be replaced by the user
- This appliance is designed for domestic use only .
- The unit must be completely drained of water before moving it or storing it.
- Never insert anything into the apertures of this unit.

BEFORE FIRST USE

1. Remove all packaging materials.
2. Clean the appliance as described in the CLEANING section of this manual.
3. Run the appliance 2 or 3 times only by water, without any coffee, to remove manufacturing smells and residues.

BASIC OPERATION

1. Place the appliance on a surface that is stable, level and not slippery . It must not be placed near to sources of high heat or on a flammable material (such as a tablecloth). Observe all other safety guidance in this manual.
2. Slide out the filter basket (D) using the handle, and the insert a standard coffee filter paper . Fill the basket with the appropriate amount of ground coffee. Slide the filter basket back into place (as it is shown in the picture).

NOTE : Put approximately one spoon of coffee into the filter basket for each cup of water you will put in (adjust to taste).

3. Lift open the lid (A) and carefully pour in 1.9L (max.) of cold water into the opening. DO NOT overfill the appliance.
4. Place the coffee jug (E) in position on the base hotplate (as shown in the picture). The jug intake opening must be directly below the output opening of the filter basket.
5. Connect the coffee maker to an appropriate mains supply switch the power onto the socket, then press the left-hand On/Off switch (C). The pilot light (built in to the switch) will indicate that the coffee maker is working (starting the coffee preparation). After a short time, coffee will start coming out from the filter basket aperture, into the coffee Jug.

CAUTION : As soon as you have switched on the On/Off switch (C) the machine will start to heat up! Be careful!

6. Once the preparation cycle has finished the indicator light goes out. Wait a minute until the dripping process has completely stopped and then you can serve your coffee.
7. T o keep the coffee hot, leave the jug on the base hotplate (F). You can also leave the jug on the top hotplate (G). Switch the power on to the top hotplate by pressing the right-hand On/Off switch (C).
8. Once you have finished with the coffee maker, switch both switches (C) to the off position, and remove the plug from the mains supply . Now clean your coffee maker.

CLEANING and MAINTENANCE

IMPORTANT: Before any cleaning or maintenance, ensure that the coffee maker is switched off , disconnected from the mains, and completely cool.

- After daily use wash the jug and filter basket with warm soapy water . To help remove any coffee stains from the inside of the jug, leave some water & vinegar solution in the jug for 20 minutes then rinse out with clean water
- Wipe the outside of the appliance with a soft damp cloth. After the cleaning procedure you should use a soft dry cloth to wipe and polish the surface. DO NOT use abrasive cleaners or metallic cleaning objects

NEVER IMMERSE THE APPLIANCE!

DESCALING: Depending on the local water , the interior parts may calcify after a while. In order to keep the machine in best condition and to achieve the best coffee brewing results, it is necessary to descale the machine approximately every 6 months. You should also descale the machine if the brewing process starts taking longer than usual, when the brewing sounds get louder or if the machine shuts off even when there is still water left in the tank (due to very hard water).

1. Dissolve 100g of descaler in cold water to produce one litre of solution or add 300g of fresh or condensed lemon juice to one litre of warm water (below 50° C)
2. Slide the filter basket into position (without coffee powder)
3. Place the empty jug in the intended position underneath the filter basket.
4. Carefully fill the solution into the water tank.