1.LISTADO REPUESTOS REFRIGERADOR VINOS/ SPARE PARTS WINE REFRIG.

230V/50Hz REF. 19034762

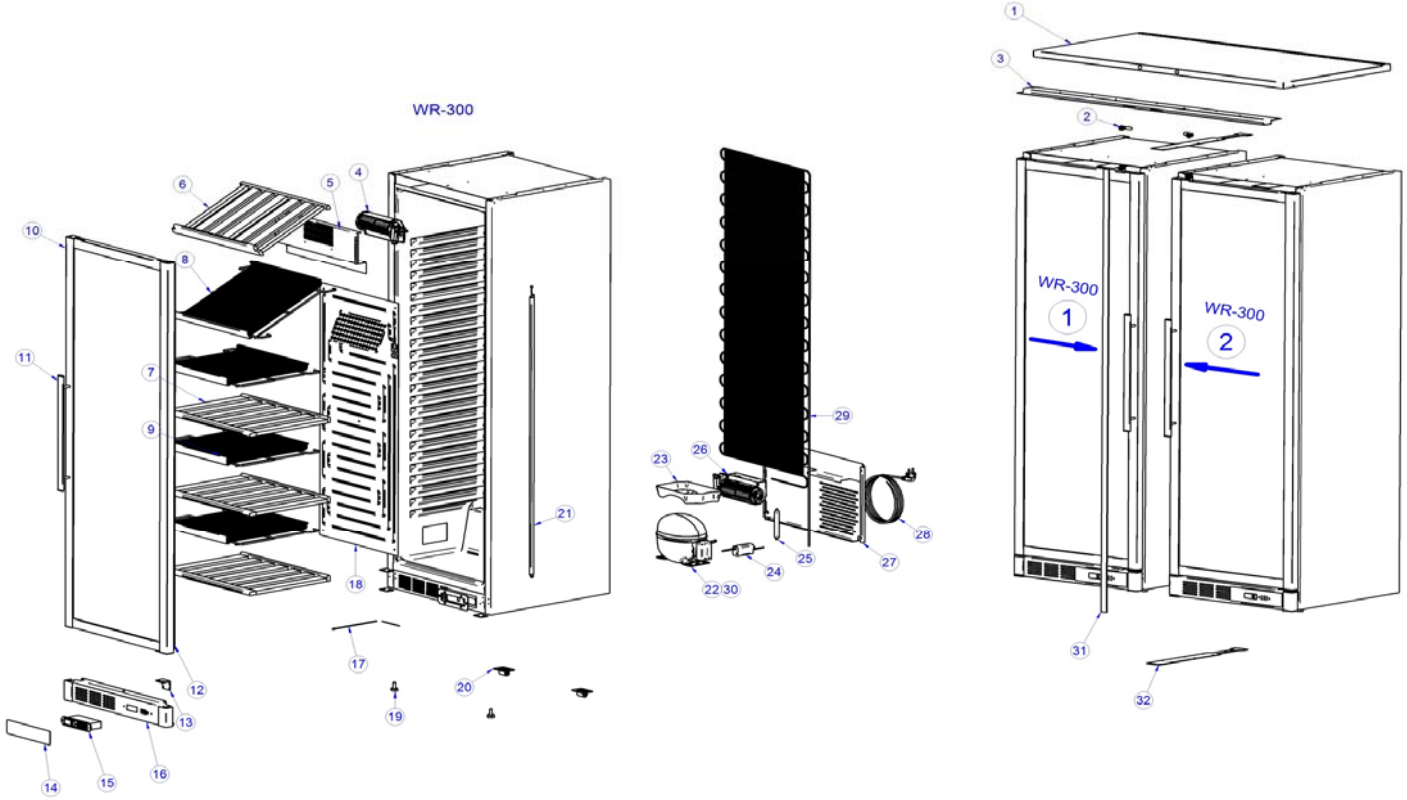

1.LISTADO REPUESTOS REFRIGERADOR VINOS/ SPARE PARTS WINE REFRIG.

230V/50Hz REF. 19034762

Nº	CODE CÓDIGO	RECOM.	DESCRIPCIÓN	DESCRIPTION			
1	12128584		ENCIMERA RV-600 PINT NEG CERRAD SUBCONTR	TOP COVER PAINT IN BLACK			
2	12038139		CERRAD 2914.E02NI LENG.CR90º	DOOR LOCK REF.2914.E02NI LENG.CR90º			
3	12128583		SOP SUJEC ENCI RV-600 PINT NEGRO SUBCONT	TOP BRACKET DOOR PAINT IN BLACK			
4	12059053		TURB TANG TAS118B-009 TF A003 MOTOR 0º	INTERIOR TANGENCIAL FAN 230V/50Hz			
5	12128094		TIRO FORZADO RV-300 VINOTECAS	COVER INTERIOR TANGENCIAL FAN			
6	12128098		ESTANTE MADERA 45º WR-300	45º INCLINED SHELF WOOD			
7	12128086		ESTANTE MADERA WR-300	HORIZONTAL SHELF WOOD			
8	12136236		PARR SERIE 300 45º PINTADA NEGRO RAL9005	INCLINED IRON WIRE SHELF COATED IN BLACK			
9	12095953		PARR SERIE 300 PINTADA NEGRO RAL9005	HORIZONTAL IRON WIRE SHELF COATED IN BLACK			
10	12128542		PUERTA CRISTAL COMPLETA	COMPLETE DOOR WR-300			
11	12123472		CONJ TIRADOR RV-90-SL PLATA GRATADO	HANDLERV-90-SL SILVER			
12	12057676		BURL 1700X600 UR260 NEG 300	GASCKET 1700X600 UR260 NEG 300			
13	12058521		BIS INF DCH SUP IZQ RVC-300 PI	BOTTOM HINGE PAINTED IN BLACK			
14	12104752		ADHESIVO G. CONCEPT PWC	COVER STICKER THERMOSTAT PWC			
15	12043611		TERMOSTATO POWER COMPAC REFRIG	THERMOSTAT POWER COMPAC REFRIG			
16	12137941		CONJ REJ INF WR-300 POWER COMPAC	COMPLETE BOTTOM GRILL			
17	12035780		SONDA CAREL NTC030HP00 3MT	PROBE CAREL NTC030HP00 3MT			
18	12128508		PL EV RVC-300 NEGRA PINT SUBCONTRATA	ROLL BOND RVC-300 PAINT IN BLACK			
19	12058693		PIE NIV HEX M10X30 00301200506	LEVELERS HEX M10X30 00301200506			
20	12058632		RUE FIJ RODILLO ø23X35mm CR005	BACK WHELLS ø23X35mm CR005			
21	12137559		TIRA LED T3D-1250-3014XHD-WW 24V	LED STRIP T3D-1250-3014XHD-WW 24V			
22	12128698		COMPR. HMK12AA R600a 16352900	COMPRESSOR HMK12AA R600a 16352900 230V/50Hz			
23	12128699		BAND EVAP AUTO 11318802 HMK	EVAPORATION TRAY OVER COMPRESSOR 11318802 HMK			
24	12103609		FUENT APV-16-24 115-230 50/60Hz 24V 16W	POWER SUPPLY APV-16-24 115-230 50/60Hz 24V 16W			
25	12061055		FILT DESHID 20GR 1/4X1/4	DESHIDRATING FILTER 20GR 1/4X1/4			
26	12059053		TURB TANG TAS118B-009 TF A003 MOTOR 0º	EXTERIOR TANGENCIAL FAN			
27	12103112		TAPA RESP EXT RVC-300 R600a 110127	REAR COVER 110127			
28	12058940		MANG 3X1X2500 BL C/CL SCHUKO	POWER HORSE 3X1X2500 BL C/CL SCHUKO			
29	12061004		COND TUBO ø4.75 534x1400+250	CONDERSER ø4.75 534x1400+250			
30	12130454		DISPOSITIVO DE ARRANQUE SECOP K100 ZAFP 15164700	STARTING DEVICE SECOP K100 ZAFP 15164700			
31	12067293		PERFIL PVC UNION FRONTAL	PVC PROFILE FRONT UNION			
32	12128608		PLACA UNIÓN CUERPOS RV-600 VINOS	BRACKET JOINING BODIES			