VRXH2000/330

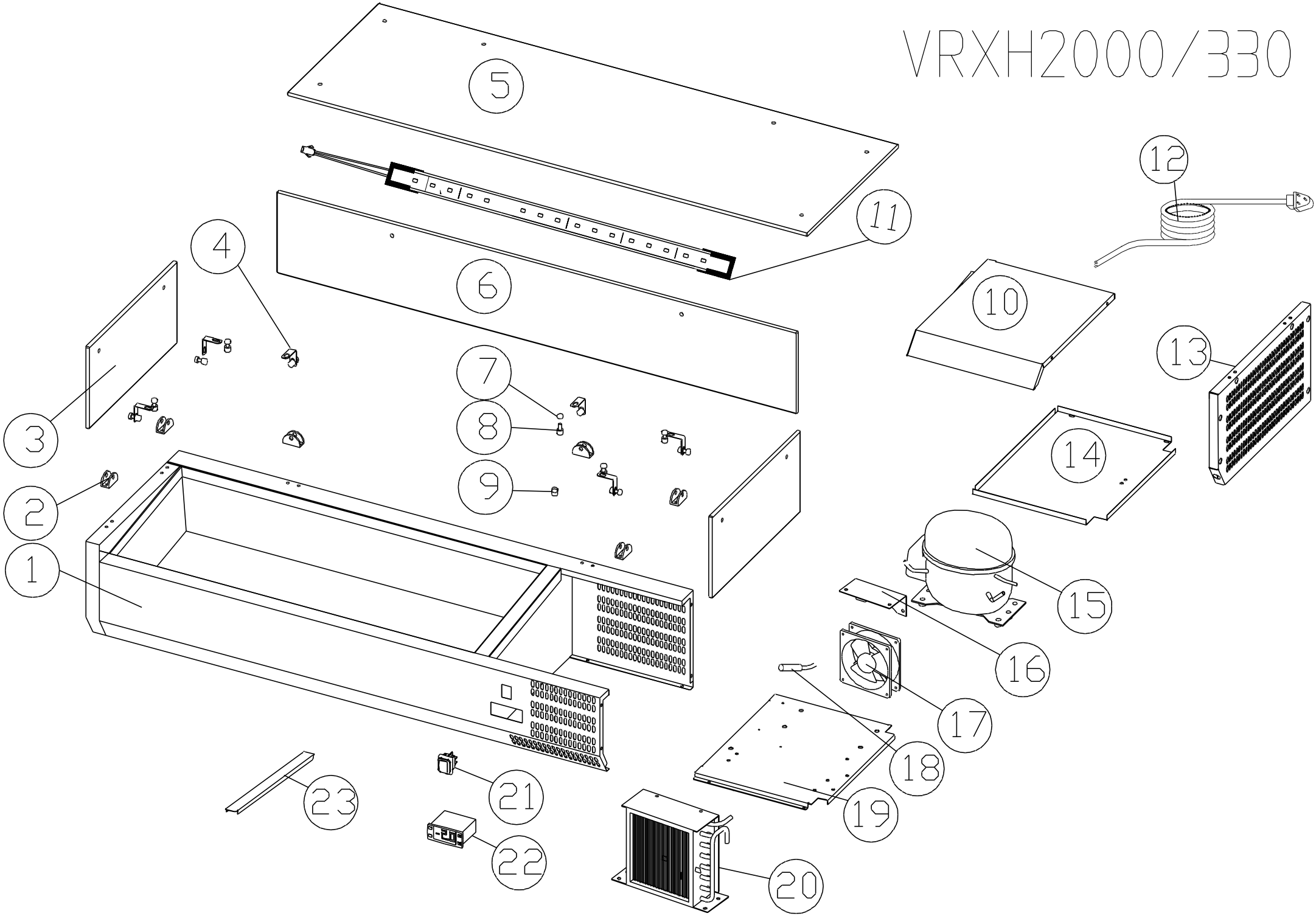

AGS203LN Spare parts list

No.		Name			
1	SKC-0-000-0456-0	BODY	1		
2	SKC-2-170-0085-0	GLASS FIXING CLIP	6		
3	SKC-2-150-1937-0	SIDE GLASS	2		
4	SKC-2-001-0270-0	feet	6		
5	SKC-2-150-1936-0	TOP GLASS	1		
6	SKC-2-150-0037-0	BACK GLASS	1		
7	SKC-2-160-0183-0	GLASS FIXING SCREW	12		
8	SKC-2-160-0177-0	GLASS LINKING CLIP	12		
9	SKC-2-170-0227-0	BUSHING	12		
10	SKC-2-005-1194-0	UNIT ROOM COVER	1		
11	SKC-4-050-0075-0		1		
12	SKC-4-010-0111-0	power core	1		
13	SKC-2-005-1193-0	SIDE COVER	1		
14	SKC-2-005-1008-0	UNIT PLATE	1		
15	SKC-4-040-0161-0	COMPRESSOR	1		
16	SKC-2-005-0013-0	FAN CONNECTION BOARD	1		
17	SKC-4-001-0026-0	CODENSOR FAN	1		
18	SKC-4-030-0005-0	SENSOR	1		
19	SKC-2-001-0137-0	UNIT BOARD	1		
20	SKC-2-102-0013-0	CONDENSOR	1		
21	SKC-4-050-0001-0	MAIN SWITCH	1		
22	SKC-4-030-0002-0	THERMOSTAT	1		
23	SKC-2-005-1036-0	PAN SUPPORT	9		
24					