VRXH2000/380

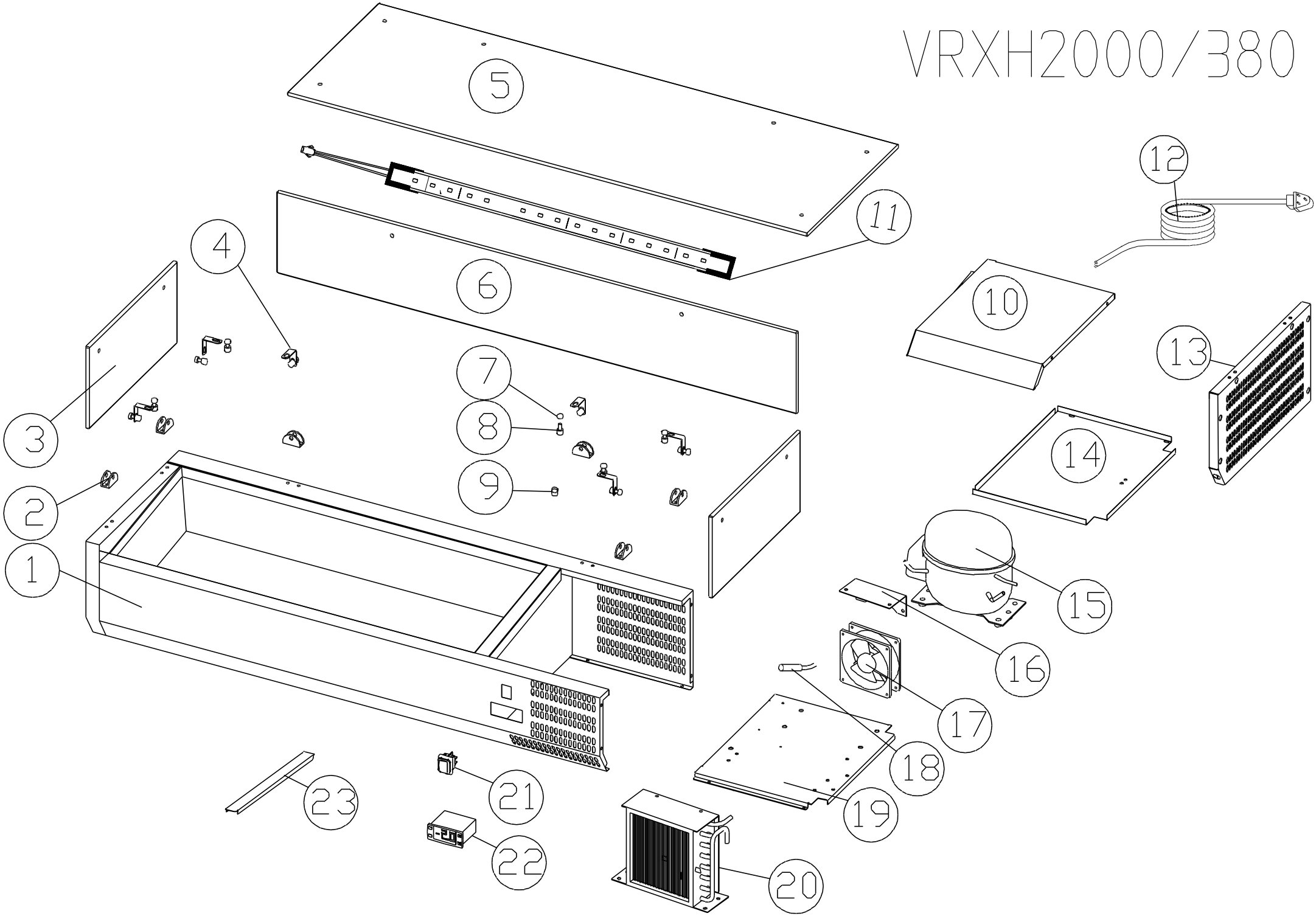

AGS204LND Spare parts list

No.		Name	
1	SKC-0-000-0411-0	BODY	1
2	SKC-2-170-0085-0	GLASS FIXING CLIP	6
3	SKC-2-150-1939-0	SIDE GLASS	2
4	SKC-2-001-0270-0	feet	6
5	SKC-2-150-1938-0	TOP GLASS	1
6	SKC-2-150-0037-0	BACK GLASS	1
7	SKC-2-160-0183-0	GLASS FIXING SCREW	12
8	SKC-2-160-0177-0	GLASS LINKING CLIP	12
9	SKC-2-170-0227-0	BUSHING	12
10	SKC-2-005-1198-0	UNIT ROOM COVER	1
11	SKC-4-050-0075-0		1
12	SKC-4-010-0111-0	power core	1
13	SKC-2-005-1197-0	SIDE COVER	1
14	SKC-2-005-1057-0	UNIT PLATE	1
15	SKC-4-040-0161-0	COMPRESSOR	1
16	SKC-2-005-0013-0	FAN CONNECTION BOARD	1
17	SKC-4-001-0026-0	CODENSOR FAN	1
18	SKC-4-030-0005-0	SENSOR	1
19	SKC-2-001-0136-0	UNIT BOARD	1
20	SKC-2-102-0013-0	CONDENSOR	1
21	SKC-4-050-0001-0	MAIN SWITCH	1
22	SKC-4-030-0002-0	THERMOSTAT	1
23	SKC-2-005-1099-0	PAN SUPPORT	9
24			