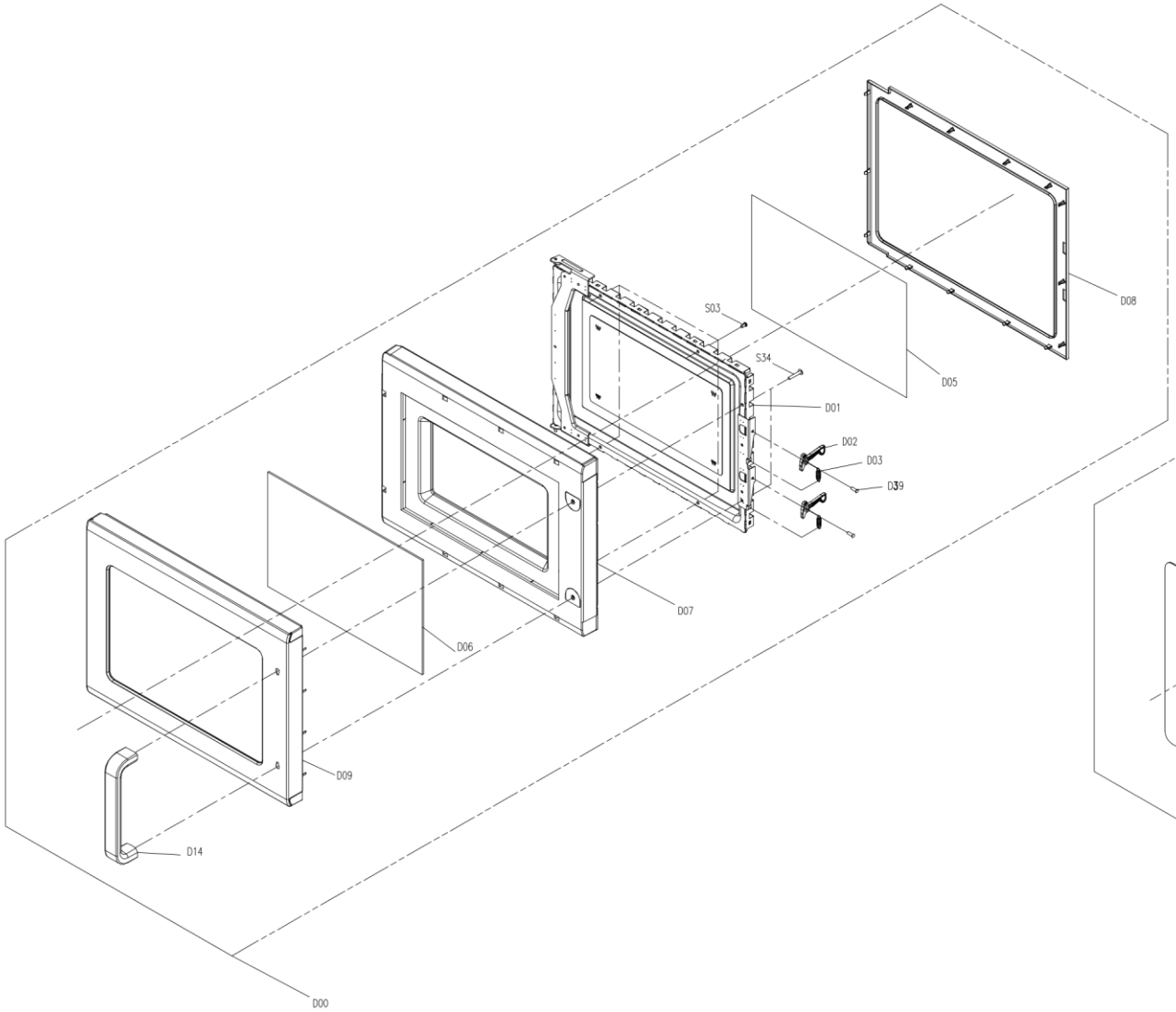

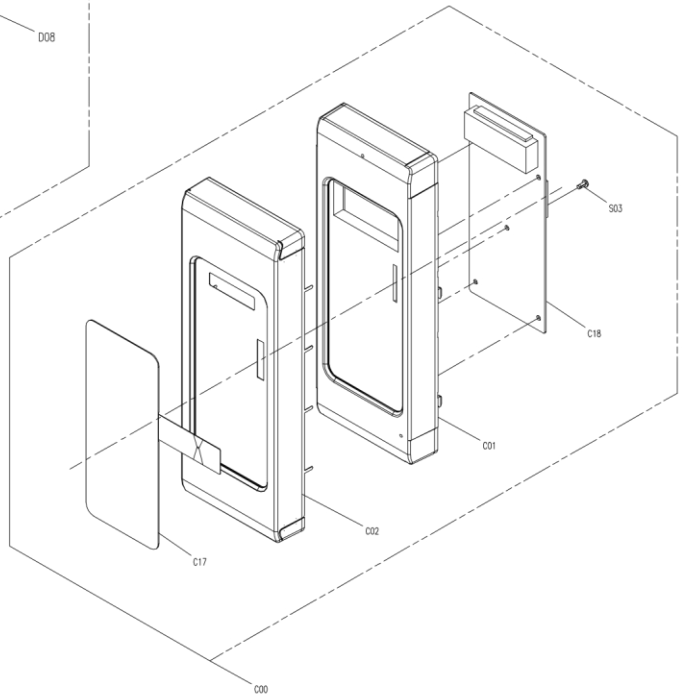

No.	Part Name	Qty.	No.	Part Name	Qty.
S34	SCREW ST4*30PBHC	2			
S03	SCREW 4*8PBHC	4			
D14	HANDLE	1			
D09	DOOR DECORATION	1			
D08	DOOR GASKET	1			
D07	DOOR PANEL	1			
D06	DOOR SCREEN	1			
D05	DOOR INNER FILM	1	S03	SCREW ST4x8PBHC	5
D39	LATCH SHAFT	2	C18	PCB ASS'Y	1
D03	LATCH SPRING	2	C17	MEMBRANE SWITCH	1
D02	LATCH	2	C02	CONTROL PANEL DECORATION	1
D01	OOR FRAME ASSY	1	C01	CONTROL PANEL	1
D00	DOOR	1	C00	CONTROL PANEL ASS'Y	1

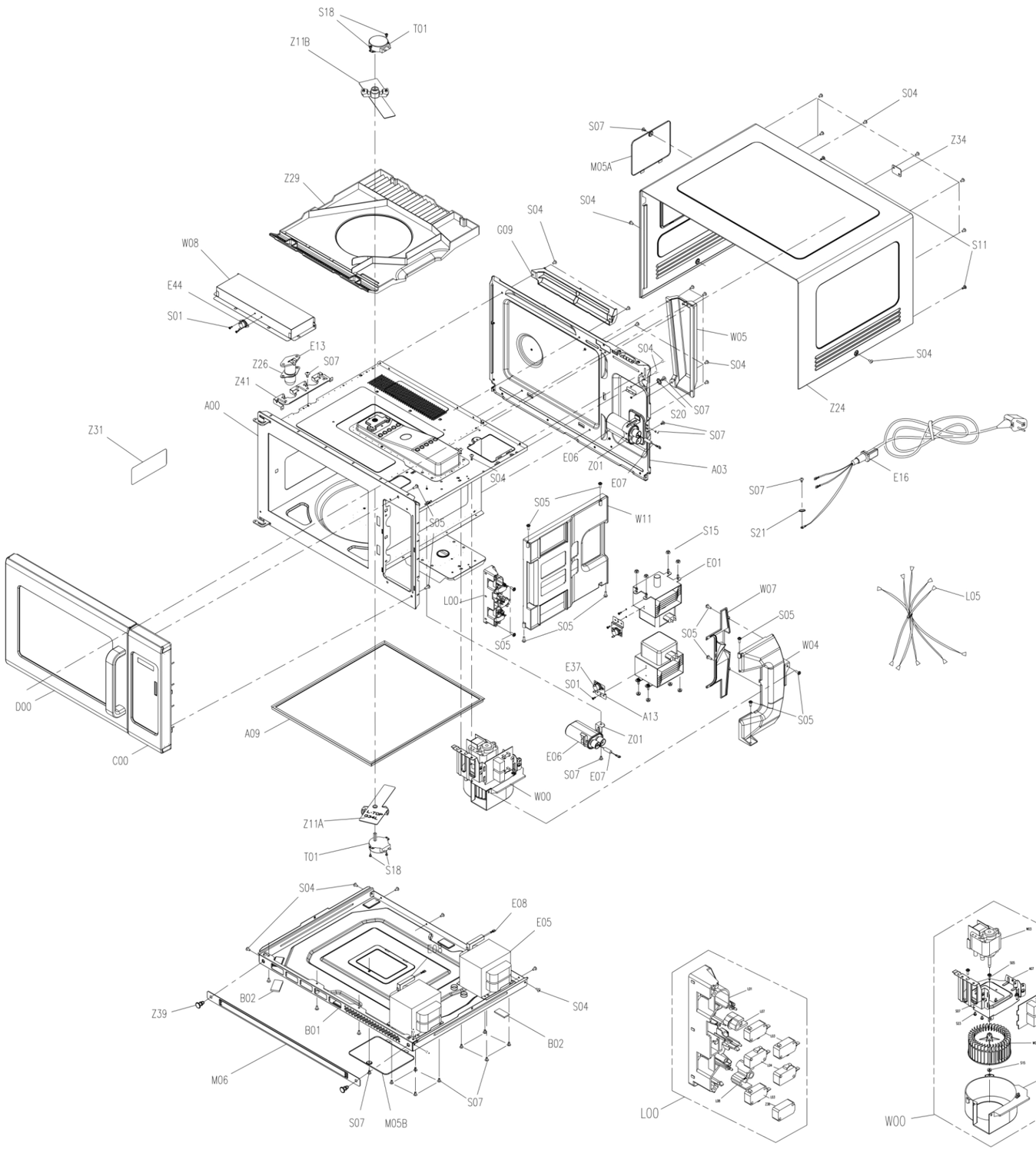

Z41		LAMP SOCKET BRACKET	1		
Z39		PLASTIC NAIL	2		
Z38		SPACER	1		
Z34		MOUNTING PLATE	1		
Z31		LAMP COVER	1		
Z29		OIL BLOCKAGE	1		
Z26		VIBRATION ABSORBER	1		
Z24		OUT CASE	1		
Z11		STIRRER FAN	2		
Z01		HOLDER H.V.C	2		
T01		TRAY MOTOR	2		
W11		VENT GRILLE	1		
W08		UPPER WIND GUIDE	1		
W07		PROTECTOR COVER	1		
W05		SIDE HEAT INSULATOR	1		
W04		WIND GUIDE	1		
W03		FAN MOTOR	1		
W02		FAN	1		
W01		FAN GUIDE	1		
S23		SCREW CT4*6 PBHC	3		
S21		SPRING WASHER Φ4.1	1		
S20		WASHER	1		
S18		SCREW ST4*6 PBHC	4		
S15		NUT M5	8		
S11		TORX SCREW CT4x10PBHC	2		
S07		SCREW CT4x8 TBHC	19		
S05		SCREW ST4x12 PBHC	13		
S04		SCREW ST4x10 PBHC	31		
S01		SCREW CT3x8 PBHC	4		
M06		FILTER	1		
M05		LAMP COVER	2		
L08		BOT LEVER	1		
L07		TOP LEVER	1		
L05		MAIN HARNESS	1		
L04		MICROSWITCH MONITOR	2		
L03		MICROSWITCH INTERLOCK	3		
L01		LATCH BOARD	1		
G09		UPPER HEAT INSULATOR	1		
E44		THERMOSTAT 120/0 *V	1		
E37		THERMOSTAT 150/90 *V	2		
E16		POWER CORD	1		
E13		LAMP	1		
E11		FUSE	2		
E10		NOISE FILTER	1		
E08		H.V.FUSE	2		
E07		H.V.DIODE	2		
E06		H.V.CAPACITOR	2		
E05		H.V.TRANSFORMER	2		
E01		MAGNETRON	2		
D00		DOOR	1		
C00		CONTROL PANEL ASS'Y	1		
B02		FOOT SUPPORT	6		
B01		BASE PLATE	1		
A13		THERMOSTAT BRACKET	2		
A09		INNER PROTECTOR PALTE ASSY	1		
A07		MOTOR BRACKET	1		
A03		BACK PLATE	1		
A00		CAVITY ASS'Y	1		
No.		Part Name	Qty.		