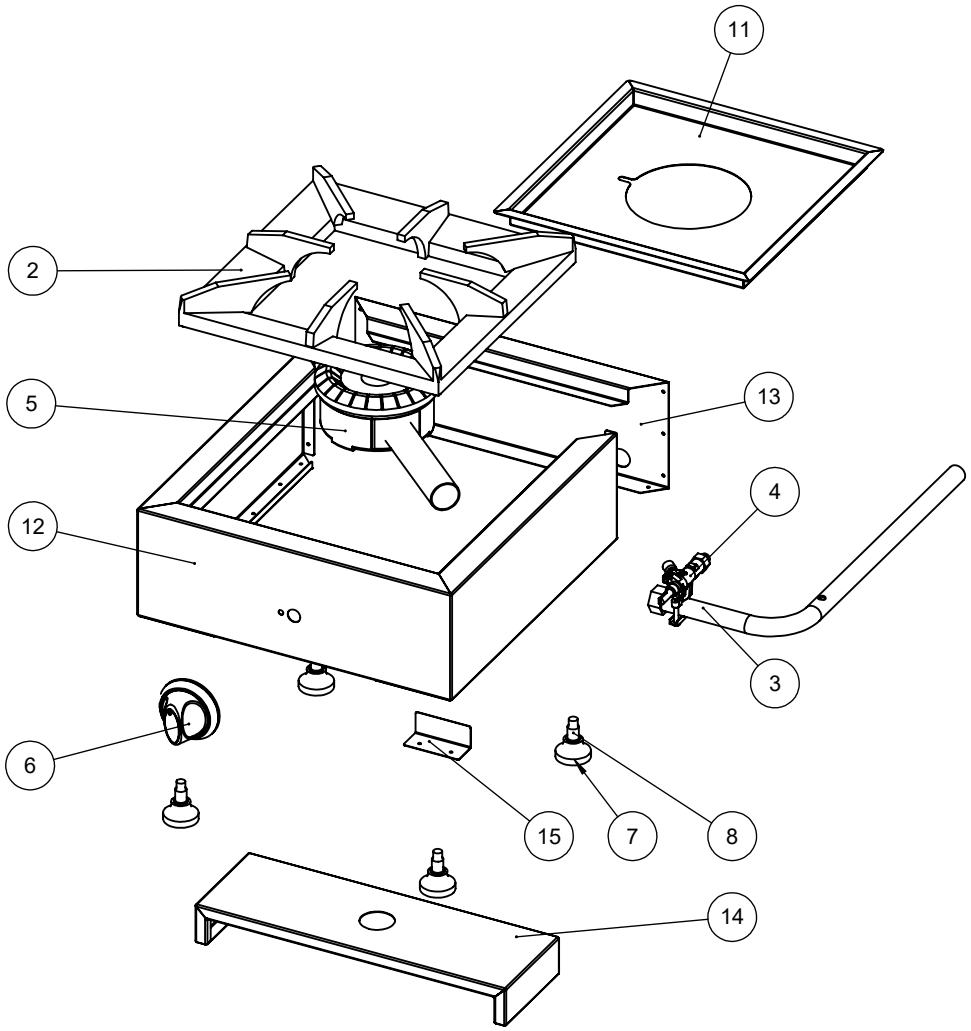

No	Part Name	QTY	Material	Weight	Explanation
1	Cast Iron	1	Ready		
2	33x33 Cast Iron	1	Ready		
3	Tube	1	Ready		
4	Gas Valve	1	Ready		19,28
5	Burner	1	Ready		
6	Knob	1	Ready		
7	Leg	4	Ready		M10
8	Rivet Nut	4	Ready		M10
9	Pop Rivet	26	Ready		Ø3
10	40x40 Tray	1	AISI 430	0,36	
11	40x40 Tray	1	AISI 430	0,73	
12	40x40 Body	1	AISI 430	1,74	
13	40x40 Cover	1	AISI 430	0,56	
14	40x40 Burner Connection Sheet	1	AISI 430	0,56	
15	40x40 Tube L	1	AISI 430	0,040	
16	Thermocouple	1	Ready		
17	Thermocouple Connection Sheet	1	AISI 430	0,060	
18	Flexible Pipe	1	Ready		Ø8x30

GHTC1