DO NOT SCALE DRAWING
RESIM UZERINDEN OLCU ALMAYINIZ

CRITICAL DIMENSIONS ARE SIGNED
KIRITIK OLCULER ISARETLENMISTIR

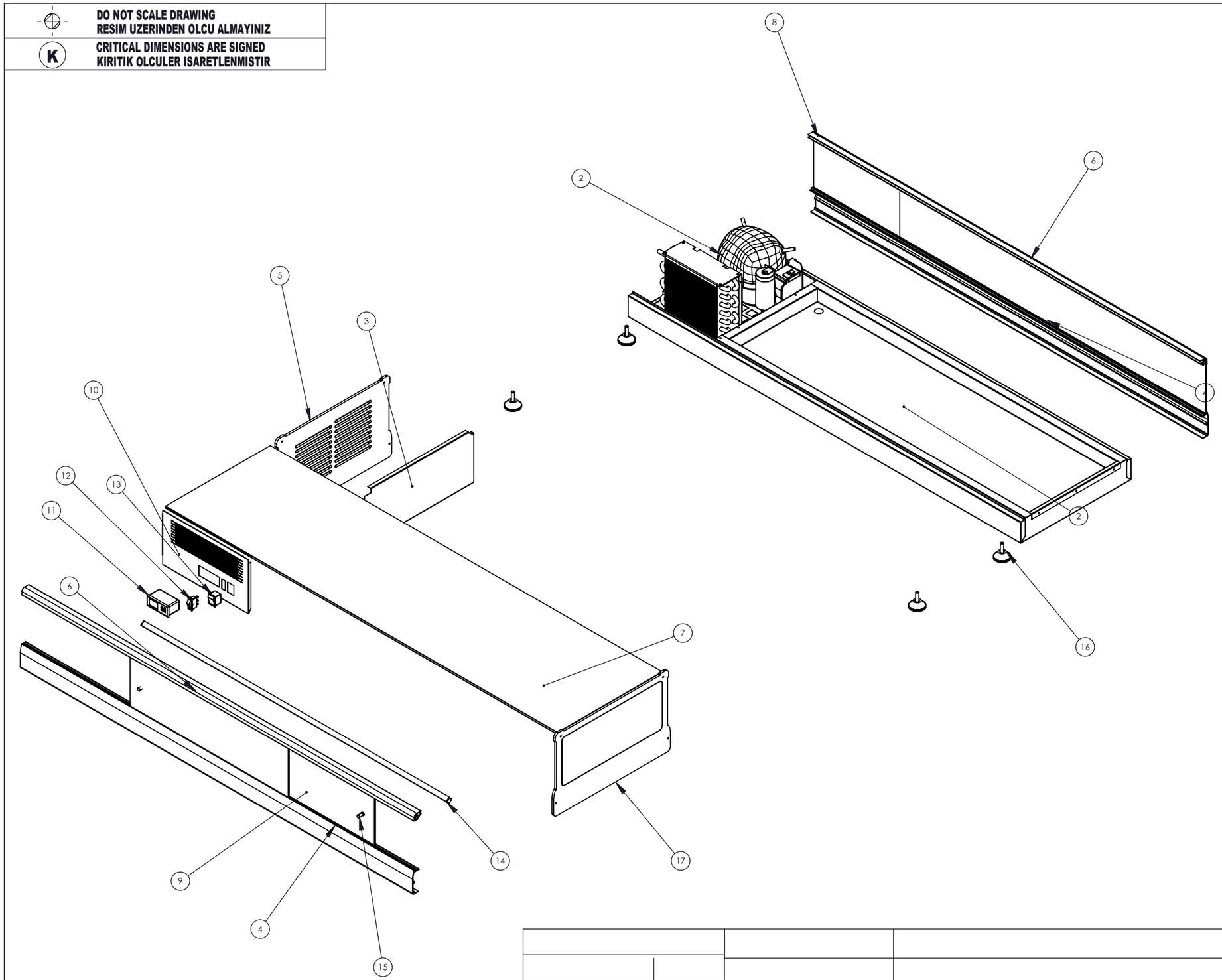

ITEM NO.	PART NUMBER	QTY.
1	PU GROUP	1
2	COOLING GROUP	1
3	30012702040007_GROUP SEPARATION SHEET (SCR)	1
4	300110040030005_FRONT LOWER PROFILE SCR	2
5	300110020020101_SCR_ FLAT GLASS ENGINE COVER	1
6	300110040030007_UPPER PROFILE ALUMIN SCR-140_	2
7	300110120020094_SCR-1 40_FLATGLASS TOP GLASS	1
8	300110120020095_SCR-140 FLATGLASS REAR GLASS	1
9	300110120020003 SLIDING GLASS(SCR-140)	2
10	30012702040003 CONTROL PANEL SCR VERTICAL GLASS	1
11	300110070090002 POSITIVE DIGITAL THERMOSTAT	1
12	300110070030003_ON OFF SWITCH SCR-TTR	1
13	300110070030001_ON-OFF SWITCH YELLOW	1
14	300110040030011_AL_P ROFIL LIGHTING-SCR	1
15	30011050010135_SCR SLIDING GLASS HANDLE	2
16	300110090020043_SCR_ TTR_GDC ROTARY FEET	4
17	300110020020100_SCR_ FLATGLASS BODY SIDE COVER	1

DO NOT SCALE DRAWING
RESIM UZERINDEN OLCU ALMAYINIZ

CRITICAL DIMENSIONS ARE SIGNED
KIRITIK OLCULER ISARETLENMISTIR

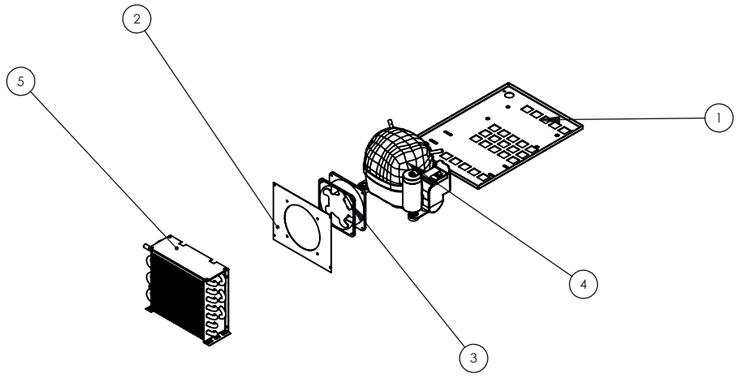

ITEM NO.	PART NUMBER	QTY.	Material	Weight	
1	30012702020007 CONDENSER TRAY(SCR)	1			
2	30012702020005 FAN CONNECTION SHEET (SCR)	1			
3	300110110040003_FAN_ SQUARE120x120 BEARING	1			
4	300110110030508 COMPRESSOR 4422_0,2BG_R1 34A	1			
5	300110110010008 CONDENSER	1			