DO NOT SCALE DRAWING
RESIM UZERINDEN OLCU ALMAYINIZ

CRITICAL DIMENSIONS ARE SIGNED
KIRITIK OLCULER ISARETLENMISTIR

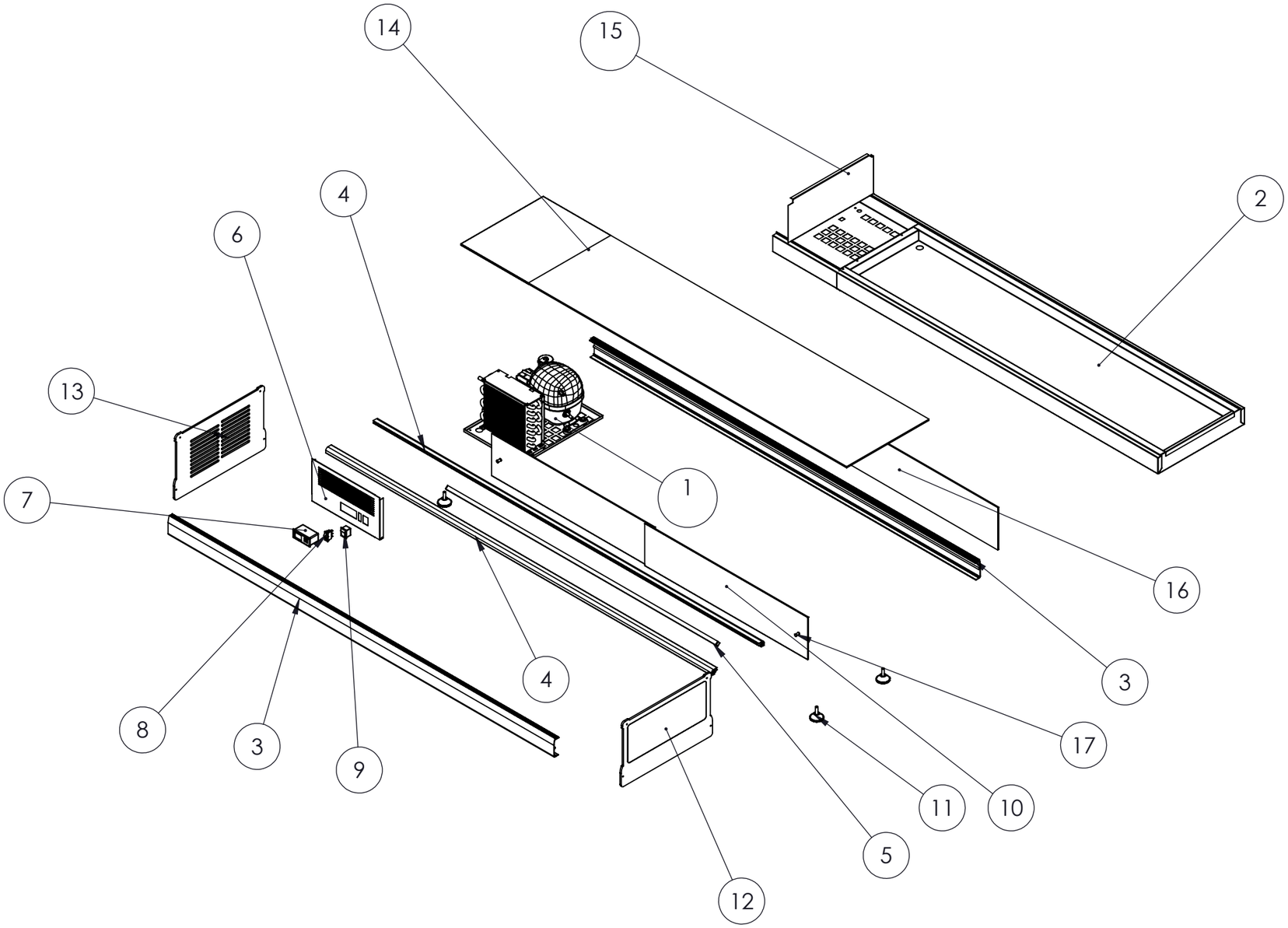

ITEM NO.	PART NUMBER	QTY.
1	PU GROUP	1
2	COOLING GROUP	1
3	300110040030024 VERTICAL FRONT BOTTOM PROFILE SCR-180	2
4	300110040030026 VERTICAL TOP PROFILE ALUMIN SCR-180	2
5	300110040030012-ALUMIN-PROFILE-LIGHTING-SCR-180_12-1410 mm	1
6	30012702040004-CONTROL-PANEL (SCR)	1
7	300110070090002-POSITIVE-DIGITAL-THERMOSTAT	1
8	300110070030003-ON-OFF SWITCH-SCR-TTR-GREEN	1
9	300110070030001-ON-OFF SWITCH (0-1) YELLOW	1
10	300110120020004-SLIDING GLASS_725-163-5_SCR-180	2
11	300110090020043-SCR-TTR-GDC ROTARY FEET	4
12	300110020020100 SCR PLEXI SIDE COVER-SCR	1
13	300110020020101 SCR PLEXI ENGINE COVER-SCR	1
14	300110120020102-SCR-180 FLATGLASS TOP GLASS 6-263-1715 mm	1
15	30012702040008-GROUP-SEPARATION-SHEET (SCR FG)	1
16	300110120020103-SCR-180 FLATGLASS-REAR-GLASS_ 4-166-1715 mm	1
17	300110050010135-SCR-SLIDING-GLASS-HANDLE	2

DO NOT SCALE DRAWING
RESIM UZERINDEN OLCU ALMAYINIZ

CRITICAL DIMENSIONS ARE SIGNED
KIRITIK OLCULER ISARETLENMISTIR

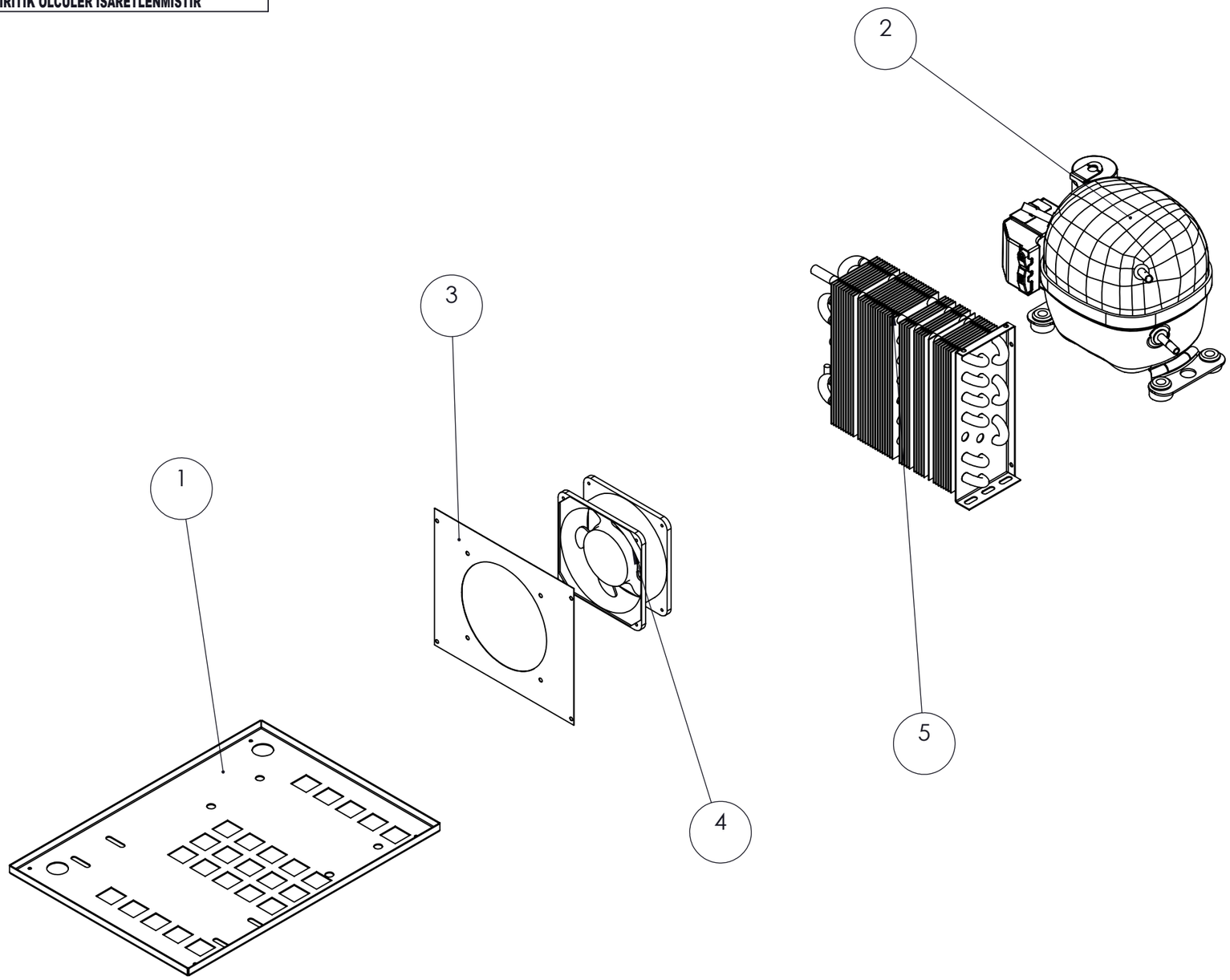

ITEM NO.	PART NUMBER	QTY.
1	30012702020007-CONDENSER-TRAY (SCR)	1
2	300110110030503-THB-4422-YGS-HERMETIC-COMPRESSOR	1
3	30012702020005-FAN-CONNECTION-SHEET(SCR)	1
4	3001110110040003 FAN SQUARE BEARING 120X120	1
5	300110110010008 CONDENSER 7X3 SCR-TTR	1