TEVHA3
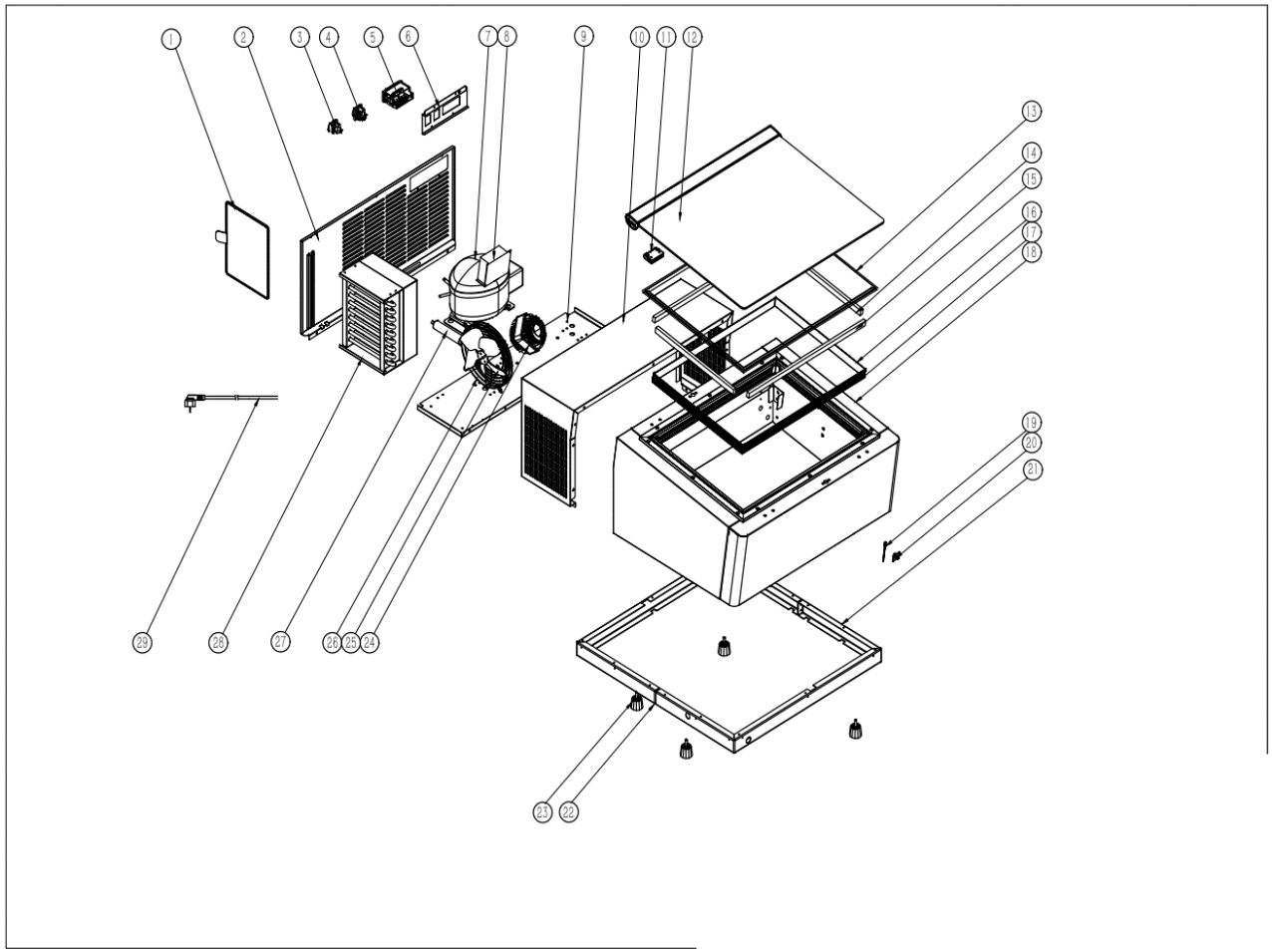
	Parts				
1	Condenser filter	M54601200		1	
2	Back plate	M546035W0		1	
3	Switch （green 12V）	E00049400		1	
4	Switch （Red）	E00029400		1	
5	Controller	E00048300		1	
6	Control panel	M54604400		1	
7	Compressor	R54600300		1	
8	Transformer	E00053000		1	
9	Unit board	M54601400		1	
10	Engine room coaming	M546013W0		1	
11	Torque hinge	M000095B0		2	
12	Door	A54600700		1	
13	Gasket	P54600300		1	
14	side light	E54600800		2	
15	front/back light	E54600700		2	
16	side light cover	P546015W0		2	
17	front/back light cover	P546014W0		2	
18	Foaming body	A54600100		1	
19	Room probe	E00029100		1	
20	Wiring fixing base	C000123A0		1	
21	Front base	M546017W0		1	
22	Back base	M546036W0		1	
23	Feet	P110015B0		4	
24	Fan	E54601100		1	
25	Fan net cover	M00014300		1	
26	Fan blade	M00014200		1	
27	Solid dryer	R00001400		1	
28	Condernser	R50100300		1	
29	EU plug	E41300100		1